8030 Straight Square
Entrance Pull Handles

dormakaba's straight square entrance pull handles epitomize the high quality ambitions of the dormakaba brand – designed for excellence down to the very last detail and exuding fine craftsmanship.
They offer genuine quality, characterised by clearly defined features – irrespective of shape or size.

Created in solid, premium 316 Marine Grade Stainless Steel offering superior corrosion resistance for internal and external use in high traffic buildings. The round section allows comfortable ease of use.

The 8030 entrance pull handles are an ideal choice for residential and commercial applications and are suitable for use on glass, timber and aluminium doors.

Please refer to ordering details for a range of optional accessories to suit:

- Back to back extended fixing for timber doors
- Back to back fixing for glass doors
- Disc fixing for timber doors
- Disc fixing for glass doors

AS1428 Compliant

Features at a glance:

- 316 Marine Grade Stainless Steel
- Designed with your project's needs in mind
- High durability with concealed fixings
- Standard finishes: SSS and PSS
- Powdercoat and custom finishes available on request

dormakaba Australia
Head Office
12-13 Dansu Court
Hallam VIC 3803
T: 1800 675 411
info.au@dormakaba.com
www.dormakaba.com.au

dormakaba New Zealand
Head Office
Building P, 61-69 Patiki Road
Avondale, Auckland 1026
T: 0800 436 762
info.nz@dormakaba.com
www.dormakaba.co.nz

Fixing options

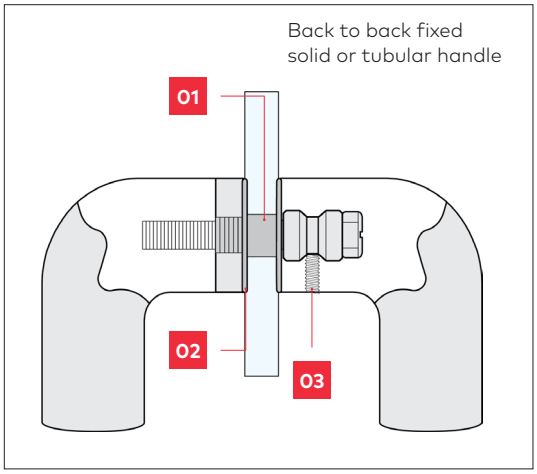

GD FIX - glass doors

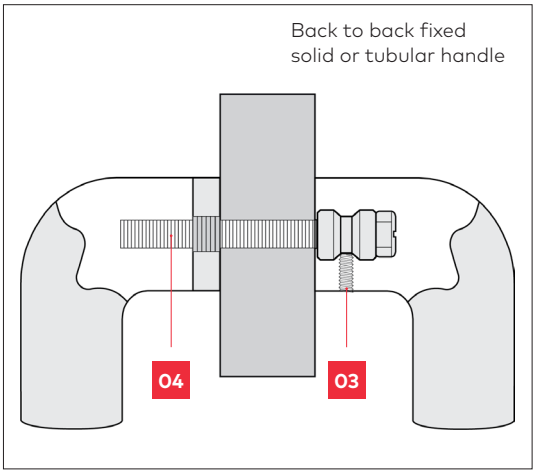

TM FIX - timber or metal doors

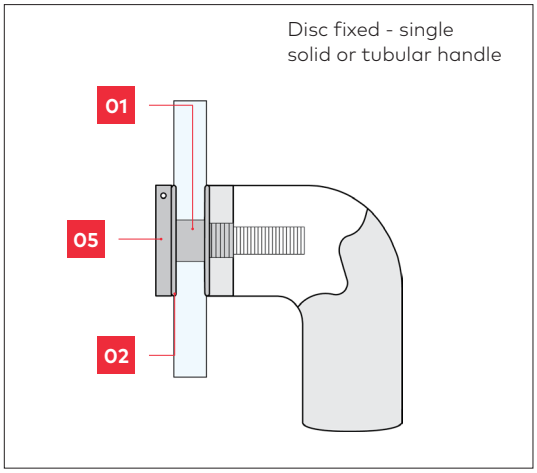

D FIX - glass, metal or timber doors

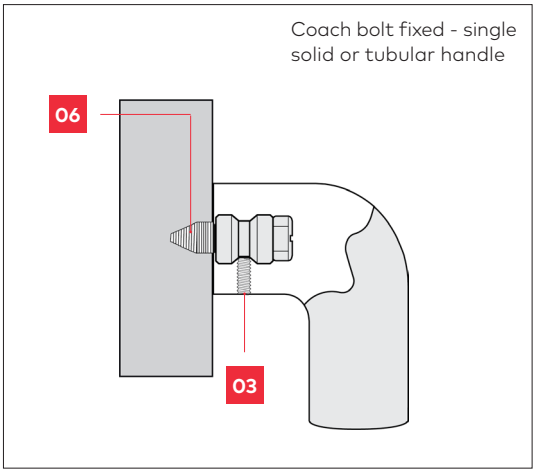

C FIX - timber doors only

TIMBER DOOR FIXING

Material Size	Bolt Size
14mm Ø	5mm
16mm Ø	5mm
19mm Ø	8mm
25mm Ø	8mm
32mm Ø	8mm

METAL DOOR FIXING

Material Size	Bolt Size
14mm Ø	5mm
16mm Ø	5mm
19mm Ø	8mm
25mm Ø	8mm
32mm Ø	8mm

GLASS DOOR FIXING

Material Size	Bolt Size
14mm Ø	12mm Ø
16mm Ø	12mm Ø
19mm Ø	12mm Ø
25mm Ø	12mm Ø
32mm Ø	12mm Ø

Note
Nylon spacers and washers are included with handle for glass door fixing option.

Legend
01 Spacer
02 Washer
03 Grub Screw
04 Bolt
05 Disc
06 Coach Bolt

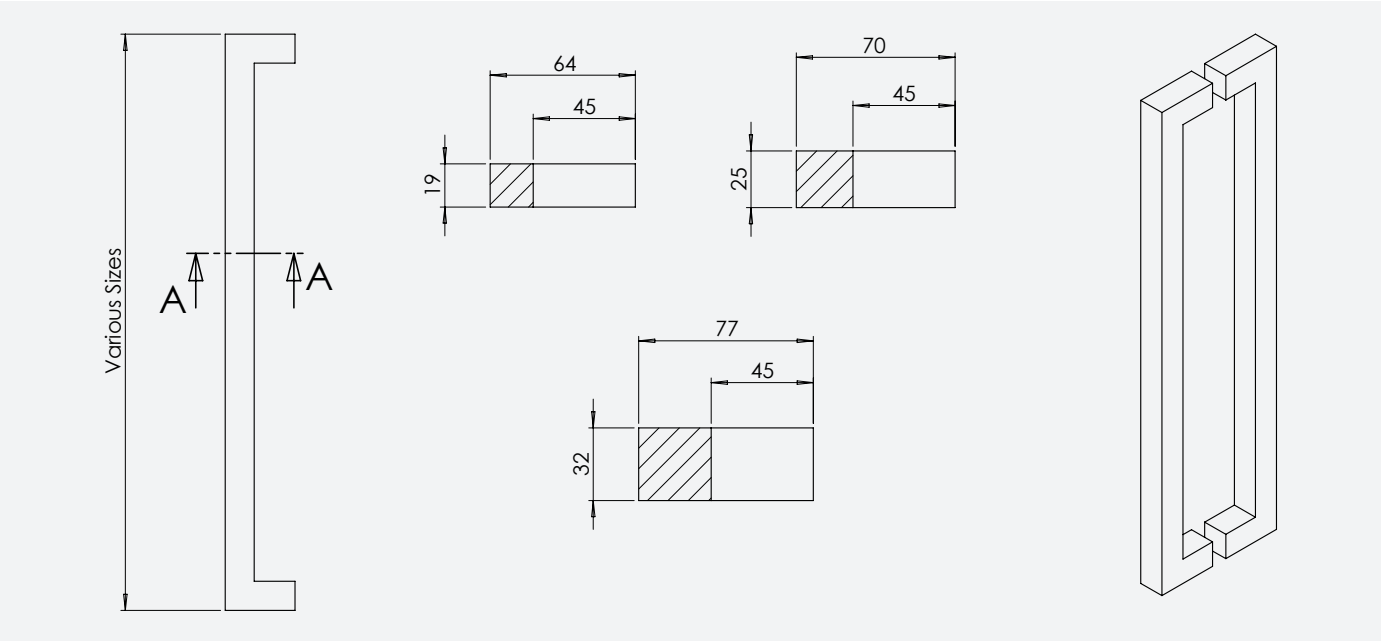

Ordering details

Item	Article Number	Description	Square Tuber	Length	Fixing Centers	Projection
BACK TO BACK FIXING						
B8030/400/19/PSS	9458033533102	B8030/400/19 OA 419 CTC 400 PSS	19mm	419mm	400mm	77mm
B8030/400/19/SSS	9458033533101	B8030/400/19 OA 419 CTC 400 SSS	19mm	419mm	400mm	77mm
B8030/400/25/PSS	9458033534102	B8030/400/25 OA 425 CTC 400 PSS	25mm	425mm	400mm	65mm
B8030/400/25/SSS	9458033534101	B8030/400/25 OA 425 CTC 400 SSS	25mm	425mm	400mm	65mm
B8030/400/32/PSS	9458033535102	B8030/400/32 OA 432 CTC 400 PSS	32mm	432mm	400mm	70mm
B8030/400/32/SSS	9458033535101	B8030/400/32 OA 432 CTC 400 SSS	32mm	432mm	400mm	70mm
B8030/500/19/PSS	9458034253102	B8030/500/19 OA 519 CTC 500 PSS	19mm	519mm	500mm	77mm
B8030/500/19/SSS	9458034253101	B8030/500/19 OA 519 CTC 500 SSS	19mm	519mm	500mm	77mm
B8030/500/25/PSS	9458034254102	B8030/500/25 OA 525 CTC 500 PSS	25mm	525mm	500mm	65mm
B8030/500/25/SSS	9458034254101	B8030/500/25 OA 525 CTC 500 SSS	25mm	525mm	500mm	65mm
B8030/500/32/PSS	9458034255102	B8030/500/32 OA 532 CTC 500 PSS	32mm	532mm	500mm	70mm
B8030/500/32/SSS	9458034255101	B8030/500/32 OA 532 CTC 500 SSS	32mm	532mm	500mm	70mm
B8030/600/19/PSS	9458034733102	B8030/600/19 OA 619 CTC 600 PSS	19mm	619mm	600mm	77mm
B8030/600/19/SSS	9458034733101	B8030/600/19 OA 619 CTC 600 SSS	19mm	619mm	600mm	77mm
B8030/600/25/PSS	9458034734102	B8030/600/25 OA 625 CTC 600 PSS	25mm	625mm	600mm	65mm
B8030/600/25/SSS	9458034734101	B8030/600/25 OA 625 CTC 600 SSS	25mm	625mm	600mm	65mm
B8030/600/32/PSS	9458034735102	B8030/600/32 OA 632 CTC 600 PSS	32mm	632mm	600mm	70mm
B8030/600/32/SSS	9458034735101	B8030/600/32 OA 632 CTC 600 SSS	32mm	632mm	600mm	70mm
B8030/700/19/PSS	9458035243102	B8030/700/19 OA 719 CTC 700 PSS	19mm	719mm	700mm	77mm
B8030/700/19/SSS	9458035243101	B8030/700/19 OA 719 CTC 700 SSS	19mm	719mm	700mm	77mm
B8030/700/25/PSS	9458035244102	B8030/700/25 OA 725 CTC 700 PSS	25mm	725mm	700mm	65mm
B8030/700/25/SSS	9458035244101	B8030/700/25 OA 725 CTC 700 SSS	25mm	725mm	700mm	65mm
B8030/700/32/PSS	9458035245102	B8030/700/32 OA 732 CTC 700 PSS	32mm	732mm	700mm	70mm
B8030/700/32/SSS	9458035245101	B8030/700/32 OA 732 CTC 700 SSS	32mm	732mm	700mm	70mm
B8030/800/19/PSS	9458035813102	B8030/800/19 OA 819 CTC 800 PSS	19mm	819mm	800mm	77mm
B8030/800/19/SSS	9458035813101	B8030/800/19 OA 819 CTC 800 SSS	19mm	819mm	800mm	77mm
B8030/800/25/PSS	9458035814102	B8030/800/25 OA 825 CTC 800 PSS	25mm	825mm	800mm	65mm
B8030/800/25/SSS	9458035814101	B8030/800/25 OA 825 CTC 800 SSS	25mm	825mm	800mm	65mm
B8030/800/32/PSS	9458035815102	B8030/800/32 OA 832 CTC 800 PSS	32mm	832mm	800mm	70mm
B8030/800/32/SSS	9458035815101	B8030/800/32 OA 832 CTC 800 SSS	32mm	832mm	800mm	70mm
B8030/900/19/PSS	9458036233102	B8030/900/19 OA 919 CTC 900 PSS	19mm	919mm	900mm	77mm
B8030/900/19/SSS	9458036233101	B8030/900/19 OA 919 CTC 900 SSS	19mm	919mm	900mm	77mm
B8030/900/25/PSS	9458036234102	B8030/900/25 OA 925 CTC 900 PSS	25mm	925mm	900mm	65mm
B8030/900/25/SSS	9458036234101	B8030/900/25 OA 925 CTC 900 SSS	25mm	925mm	900mm	65mm
B8030/900/32/PSS	9458036235102	B8030/900/32 OA 932 CTC 900 PSS	32mm	932mm	900mm	70mm
B8030/900/32/SSS	9458036235101	B8030/900/32 OA 932 CTC 900 SSS	32mm	932mm	900mm	70mm
B8030/1000/19/PSS	9458036653102	B8030/1000/19 OA 1019 CTC 1000 PSS	19mm	1019mm	1000mm	65mm
B8030/1000/19/SSS	9458036653101	B8030/1000/19 OA 1019 CTC 1000 SSS	19mm	1019mm	1000mm	65mm
B8030/1000/25/PSS	9458036654102	B8030/1000/25 OA 1025 CTC 1000 PSS	25mm	1025mm	1000mm	70mm

Ordering details

Item	Article Number	Description	Square Tuber	Length	Fixing Centers	Projection
B8030/1000/25/SSS	9458036654101	B8030/1000/25 OA 1025 CTC 1000 SSS	25mm	1025mm	1000mm	70mm
B8030/1000/32/PSS	9458036655102	B8030/1000/32 OA 1032 CTC 1000 PSS	32mm	1032mm	1000mm	77mm
B8030/1000/32/SSS	9458036655101	B8030/1000/32 OA 1032 CTC 1000 SSS	32mm	1032mm	1000mm	77mm
B8030/1100/19/PSS	9458037013102	B8030/1100/19 OA 1119 CTC 1100 PSS	19mm	1119mm	1100mm	65mm
B8030/1100/19/SSS	9458037013101	B8030/1100/19 OA 1119 CTC 1100 SSS	19mm	1119mm	1100mm	65mm
B8030/1100/25/PSS	9458037014102	B8030/1100/25 OA 1125 CTC 1100 PSS	25mm	1125mm	1100mm	70mm
B8030/1100/25/SSS	9458037014101	B8030/1100/25 OA 1125 CTC 1100 SSS	25mm	1125mm	1100mm	70mm
B8030/1100/32/PSS	9458037015102	B8030/1100/32 OA 1132 CTC 1100 PSS	32mm	1132mm	1100mm	77mm
B8030/1100/32/SSS	9458037015101	B8030/1100/32 OA 1132 CTC 1100 SSS	32mm	1132mm	1100mm	77mm
B8030/1200/19/PSS	9458037403102	B8030/1200/19 OA 1219 CTC 1200 PSS	19mm	1219mm	1200mm	65mm
B8030/1200/19/SSS	9458037403101	B8030/1200/19 OA 1219 CTC 1200 SSS	19mm	1219mm	1200mm	65mm
B8030/1200/25/PSS	9458037404102	B8030/1200/25 OA 1225 CTC 1200 PSS	25mm	1225mm	1200mm	70mm
B8030/1200/25/SSS	9458037404101	B8030/1200/25 OA 1225 CTC 1200 SSS	25mm	1225mm	1200mm	70mm
B8030/1200/32/PSS	9458037405102	B8030/1200/32 OA 1232 CTC 1200 PSS	32mm	1232mm	1200mm	77mm
B8030/1200/32/SSS	9458037405101	B8030/1200/32 OA 1232 CTC 1200 SSS	32mm	1232mm	1200mm	77mm
B8030/1300/19/PSS	9458037733102	B8030/1300/19 OA 1319 CTC 1300 PSS	19mm	1319mm	1300mm	65mm
B8030/1300/19/SSS	9458037733101	B8030/1300/19 OA 1319 CTC 1300 SSS	19mm	1319mm	1300mm	65mm
B8030/1300/25/PSS	9458037734102	B8030/1300/25 OA 1325 CTC 1300 PSS	25mm	1325mm	1300mm	70mm
B8030/1300/25/SSS	9458037734101	B8030/1300/25 OA 1325 CTC 1300 SSS	25mm	1325mm	1300mm	70mm
B8030/1300/32/PSS	9458037735102	B8030/1300/32 OA 1332 CTC 1300 PSS	32mm	1332mm	1300mm	77mm
B8030/1300/32/SSS	9458037735101	B8030/1300/32 OA 1332 CTC 1300 SSS	32mm	1332mm	1300mm	77mm
B8030/1400/19/PSS	9458038093102	B8030/1400/19 OA 1419 CTC 1400 PSS	19mm	1419mm	1400mm	65mm
B8030/1400/19/SSS	9458038093101	B8030/1400/19 OA 1419 CTC 1400 SSS	19mm	1419mm	1400mm	65mm
B8030/1400/25/PSS	9458038094102	B8030/1400/25 OA 1425 CTC 1400 PSS	25mm	1425mm	1400mm	70mm
B8030/1400/25/SSS	9458038094101	B8030/1400/25 OA 1425 CTC 1400 SSS	25mm	1425mm	1400mm	70mm
B8030/1400/32/PSS	9458038095102	B8030/1400/32 OA 1432 CTC 1400 PSS	32mm	1432mm	1400mm	77mm
B8030/1400/32/SSS	9458038095101	B8030/1400/32 OA 1432 CTC 1400 SSS	32mm	1432mm	1400mm	77mm
B8030/1500/19/PSS	9458038393102	B8030/1500/19 OA 1519 CTC 1500 PSS	19mm	1519mm	1500mm	65mm
B8030/1500/19/SSS	9458038393101	B8030/1500/19 OA 1519 CTC 1500 SSS	19mm	1519mm	1500mm	65mm
B8030/1500/25/PSS	9458038394102	B8030/1500/25 OA 1525 CTC 1500 PSS	25mm	1525mm	1500mm	70mm
B8030/1500/25/SSS	9458038394101	B8030/1500/25 OA 1525 CTC 1500 SSS	25mm	1525mm	1500mm	70mm
B8030/1500/32/PSS	9458038395102	B8030/1500/32 OA 1532 CTC 1500 PSS	32mm	1532mm	1500mm	77mm
B8030/1500/32/SSS	9458038395101	B8030/1500/32 OA 1532 CTC 1500 SSS	32mm	1532mm	1500mm	77mm
B8030/1600/25/PSS	9458038724102	B8030/1600/25 OA 1625 CTC 1600 PSS	25mm	1625mm	1600mm	65mm
B8030/1600/25/SSS	9458038724101	B8030/1600/25 OA 1625 CTC 1600 SSS	25mm	1625mm	1600mm	65mm
B8030/1600/32/PSS	9458038725102	B8030/1600/32 OA 1632 CTC 1600 PSS	32mm	1632mm	1600mm	70mm
B8030/1600/32/SSS	9458038725101	B8030/1600/32 OA 1632 CTC 1600 SSS	32mm	1632mm	1600mm	70mm
B8030/1700/25/PSS	9458038904102	B8030/1700/25 OA 1725 CTC 1700 PSS	25mm	1725mm	1700mm	77mm
B8030/1700/25/SSS	9458038904101	B8030/1700/25 OA 1725 CTC 1700 SSS	25mm	1725mm	1700mm	77mm
B8030/1700/32/PSS	9458038905102	B8030/1700/32 OA 1732 CTC 1700 PSS	32mm	1732mm	1700mm	65mm

Ordering details

Item	Article Number	Description	Square Tuber	Length	Fixing Centers	Projection
B8030/1700/32/SSS	9458038905101	B8030/1700/32 OA 1732 CTC 1700 SSS	32mm	1732mm	1700mm	65mm
B8030/1800/25/PSS	9458039054102	B8030/1800/25 OA 1825 CTC 1800 PSS	25mm	1825mm	1800mm	70mm
B8030/1800/25/SSS	9458039054101	B8030/1800/25 OA 1825 CTC 1800 SSS	25mm	1825mm	1800mm	70mm
B8030/1800/32/PSS	9458039055102	B8030/1800/32 OA 1832 CTC 1800 PSS	32mm	1832mm	1800mm	77mm
B8030/1800/32/SSS	9458039055101	B8030/1800/32 OA 1832 CTC 1800 SSS	32mm	1832mm	1800mm	77mm
B8030/1900/25/PSS	9458039234102	B8030/1900/25 OA 1925 CTC 1900 PSS	25mm	1925mm	1900mm	65mm
B8030/1900/25/SSS	9458039234101	B8030/1900/25 OA 1925 CTC 1900 SSS	25mm	1925mm	1900mm	65mm
B8030/1900/32/PSS	9458039235102	B8030/1900/32 OA 1932 CTC 1900 PSS	32mm	1932mm	1900mm	70mm
B8030/1900/32/SSS	9458039235101	B8030/1900/32 OA 1932 CTC 1900 SSS	32mm	1932mm	1900mm	70mm
B8030/2000/25/PSS	9458039384102	B8030/2000/25 OA 2025 CTC 2000 PSS	25mm	2025mm	2000mm	77mm
B8030/2000/25/SSS	9458039384101	B8030/2000/25 OA 2025 CTC 2000 SSS	25mm	2025mm	2000mm	77mm
B8030/2000/32/PSS	9458039385102	B8030/2000/32 OA 2032 CTC 2000 PSS	32mm	2032mm	2000mm	65mm
B8030/2000/32/SSS	9458039385101	B8030/2000/32 OA 2032 CTC 2000 SSS	32mm	2032mm	2000mm	65mm
B8030/2100/32/PSS	9458039535102	B8030/2100/32 OA 2132 CTC 2100 PSS	32mm	2132mm	2100mm	70mm
B8030/2100/32/SSS	9458039535101	B8030/2100/32 OA 2132 CTC 2100 SSS	32mm	2132mm	2100mm	70mm
B8030/2200/32/PSS	9458039655102	B8030/2200/32 OA 2232 CTC 2200 PSS	32mm	2232mm	2200mm	77mm
B8030/2200/32/SSS	9458039655101	B8030/2200/32 OA 2232 CTC 2200 SSS	32mm	2232mm	2200mm	77mm
B8030/2300/32/PSS	9458039805102	B8030/2300/32 OA 2332 CTC 2300 PSS	32mm	2332mm	2300mm	65mm
B8030/2300/32/SSS	9458039805101	B8030/2300/32 OA 2332 CTC 2300 SSS	32mm	2332mm	2300mm	65mm
B8030/2400/32/PSS	9458039925102	B8030/2400/32 OA 2432 CTC 2400 PSS	32mm	2432mm	2400mm	70mm
B8030/2400/32/SSS	9458039925101	B8030/2400/32 OA 2432 CTC 2400 SSS	32mm	2432mm	2400mm	70mm
ACCESSORIES - EXTENDED FIXINGS - sold as a pair						
TM/M8/50	9459508058200	M8/50 FERULE HEAD BOLT TM FIX	**Note: When ordering extended fixings please use the below formula.** Door thickness + 20mm for the Ferule + 10mm in to the other handle = round up to the nearest size offered.			
TM/M8/75	9459758078200	M8/75 FERULE HEAD BOLT TM FIX				
TM/M8/90	9400000012887	M8/90 BOLT & 16MM FERULE TM FIX				
TM/M8/100	9400000012888	M8/100 BOLT & 16MM FERULE TM FIX				
TM/M8/110	9459118118200	M8/110 BOLT & 16MM FERULE TM FIX				
TM/M8/120	9459128128200	M8/120 BOLT & 16MM FERULE TM FIX				
TM/M8/130	9459138138200	M8/130 BOLT & 16MM FERULE TM FIX				
TM/M8/150	9459158158200	M8/150 BOLT & 16MM FERULE TM FIX				
ACCESSORIES - GLASS FIXINGS - sold as a pair						
GF19/M8/50 SQU	9459501988302	19 DIA SQU GLASS FIXING PAIRS				
GF25/M8/50 SQU	9459502588302	25 DIA SQU GLASS FIXING PAIRS				
GF32/M8/50 SQU	9459503288302	32 DIA SQU GLASS FIXING PAIRS				

Ordering details

Item	Article Number	Description	Square Tuber	Length	Fixing Centers	Projection
CONCEALED FIXING						
C8030/400/19/PSS	9458033533202	C8030/400/19 OA 419 CTC 400 PSS	19mm	419mm	400mm	77mm
C8030/400/19/SSS	9458033533201	C8030/400/19 OA 419 CTC 400 SSS	19mm	419mm	400mm	77mm
C8030/400/25/PSS	9458033534202	C8030/400/25 OA 425 CTC 400 PSS	25mm	425mm	400mm	65mm
C8030/400/25/SSS	9458033534201	C8030/400/25 OA 425 CTC 400 SSS	25mm	425mm	400mm	65mm
C8030/400/32/PSS	9458033535202	C8030/400/32 OA 432 CTC 400 PSS	32mm	432mm	400mm	70mm
C8030/400/32/SSS	9458033535201	C8030/400/32 OA 432 CTC 400 SSS	32mm	432mm	400mm	70mm
C8030/500/19/PSS	9458034253202	C8030/500/19 OA 519 CTC 500 PSS	19mm	519mm	500mm	77mm
C8030/500/19/SSS	9458034253201	C8030/500/19 OA 519 CTC 500 SSS	19mm	519mm	500mm	77mm
C8030/500/25/PSS	9458034254202	C8030/500/25 OA 525 CTC 500 PSS	25mm	525mm	500mm	65mm
C8030/500/25/SSS	9458034254201	C8030/500/25 OA 525 CTC 500 SSS	25mm	525mm	500mm	65mm
C8030/500/32/PSS	9458034255202	C8030/500/32 OA 532 CTC 500 PSS	32mm	532mm	500mm	70mm
C8030/500/32/SSS	9458034255201	C8030/500/32 OA 532 CTC 500 SSS	32mm	532mm	500mm	70mm
C8030/600/19/PSS	9458034733202	C8030/600/19 OA 619 CTC 600 PSS	19mm	619mm	600mm	77mm
C8030/600/19/SSS	9458034733201	C8030/600/19 OA 619 CTC 600 SSS	19mm	619mm	600mm	77mm
C8030/600/25/PSS	9458034734202	C8030/600/25 OA 625 CTC 600 PSS	25mm	625mm	600mm	65mm
C8030/600/25/SSS	9458034734201	C8030/600/25 OA 625 CTC 600 SSS	25mm	625mm	600mm	65mm
C8030/600/32/PSS	9458034735202	C8030/600/32 OA 632 CTC 600 PSS	32mm	632mm	600mm	70mm
C8030/600/32/SSS	9458034735201	C8030/600/32 OA 632 CTC 600 SSS	32mm	632mm	600mm	70mm
C8030/700/19/PSS	9458035243202	C8030/700/19 OA 719 CTC 700 PSS	19mm	719mm	700mm	77mm
C8030/700/19/SSS	9458035243201	C8030/700/19 OA 719 CTC 700 SSS	19mm	719mm	700mm	77mm
C8030/700/25/PSS	9458035244202	C8030/700/25 OA 725 CTC 700 PSS	25mm	725mm	700mm	65mm
C8030/700/25/SSS	9458035244201	C8030/700/25 OA 725 CTC 700 SSS	25mm	725mm	700mm	65mm
C8030/700/32/PSS	9458035245202	C8030/700/32 OA 732 CTC 700 PSS	32mm	732mm	700mm	70mm
C8030/700/32/SSS	9458035245201	C8030/700/32 OA 732 CTC 700 SSS	32mm	732mm	700mm	70mm
C8030/800/19/PSS	9458035813202	C8030/800/19 OA 819 CTC 800 PSS	19mm	819mm	800mm	77mm
C8030/800/19/SSS	9458035813201	C8030/800/19 OA 819 CTC 800 SSS	19mm	819mm	800mm	77mm
C8030/800/25/PSS	9458035814202	C8030/800/25 OA 825 CTC 800 PSS	25mm	825mm	800mm	65mm
C8030/800/25/SSS	9458035814201	C8030/800/25 OA 825 CTC 800 SSS	25mm	825mm	800mm	65mm
C8030/800/32/PSS	9458035815202	C8030/800/32 OA 832 CTC 800 PSS	32mm	832mm	800mm	70mm
C8030/800/32/SSS	9458035815201	C8030/800/32 OA 832 CTC 800 SSS	32mm	832mm	800mm	70mm
C8030/900/19/PSS	9458036233202	C8030/900/19 OA 919 CTC 900 PSS	19mm	919mm	900mm	77mm
C8030/900/19/SSS	9458036233201	C8030/900/19 OA 919 CTC 900 SSS	19mm	919mm	900mm	77mm
C8030/900/25/PSS	9458036234202	C8030/900/25 OA 925 CTC 900 PSS	25mm	925mm	900mm	65mm
C8030/900/25/SSS	9458036234201	C8030/900/25 OA 925 CTC 900 SSS	25mm	925mm	900mm	65mm
C8030/900/32/PSS	9458036235202	C8030/900/32 OA 932 CTC 900 PSS	32mm	932mm	900mm	70mm
C8030/900/32/SSS	9458036235201	C8030/900/32 OA 932 CTC 900 SSS	32mm	932mm	900mm	70mm
C8030/1000/19/PSS	9458036653202	C8030/1000/19 OA 1019 CTC 1000 PSS	19mm	1019mm	1000mm	65mm
C8030/1000/19/SSS	9458036653201	C8030/1000/19 OA 1019 CTC 1000 SSS	19mm	1019mm	1000mm	65mm

Ordering details

Item	Article Number	Description	Square Tuber	Length	Fixing Centers	Projection
C8030/1000/25/PSS	9458036654202	C8030/1000/25 OA 1025 CTC 1000 PSS	25mm	1025mm	1000mm	70mm
C8030/1000/25/SSS	9458036654201	C8030/1000/25 OA 1025 CTC 1000 SSS	25mm	1025mm	1000mm	70mm
C8030/1000/32/PSS	9458036655202	C8030/1000/32 OA 1032 CTC 1000 PSS	32mm	1032mm	1000mm	77mm
C8030/1000/32/SSS	9458036655201	C8030/1000/32 OA 1032 CTC 1000 SSS	32mm	1032mm	1000mm	77mm
C8030/1100/19/PSS	9458037013202	C8030/1100/19 OA 1119 CTC 1100 PSS	19mm	1119mm	1100mm	65mm
C8030/1100/19/SSS	9458037013201	C8030/1100/19 OA 1119 CTC 1100 SSS	19mm	1119mm	1100mm	65mm
C8030/1100/25/PSS	9458037014202	C8030/1100/25 OA 1125 CTC 1100 PSS	25mm	1125mm	1100mm	70mm
C8030/1100/25/SSS	9458037014201	C8030/1100/25 OA 1125 CTC 1100 SSS	25mm	1125mm	1100mm	70mm
C8030/1100/32/PSS	9458037015202	C8030/1100/32 OA 1132 CTC 1100 PSS	32mm	1132mm	1100mm	77mm
C8030/1100/32/SSS	9458037015201	C8030/1100/32 OA 1132 CTC 1100 SSS	32mm	1132mm	1100mm	77mm
C8030/1200/19/PSS	9458037403202	C8030/1200/19 OA 1219 CTC 1200 PSS	19mm	1219mm	1200mm	65mm
C8030/1200/19/SSS	9458037403201	C8030/1200/19 OA 1219 CTC 1200 SSS	19mm	1219mm	1200mm	65mm
C8030/1200/25/PSS	9458037404202	C8030/1200/25 OA 1225 CTC 1200 PSS	25mm	1225mm	1200mm	70mm
C8030/1200/25/SSS	9458037404201	C8030/1200/25 OA 1225 CTC 1200 SSS	25mm	1225mm	1200mm	70mm
C8030/1200/32/PSS	9458037405202	C8030/1200/32 OA 1232 CTC 1200 PSS	32mm	1232mm	1200mm	77mm
C8030/1200/32/SSS	9458037405201	C8030/1200/32 OA 1232 CTC 1200 SSS	32mm	1232mm	1200mm	77mm
C8030/1300/19/PSS	9458037733202	C8030/1300/19 OA 1319 CTC 1300 PSS	19mm	1319mm	1300mm	65mm
C8030/1300/19/SSS	9458037733201	C8030/1300/19 OA 1319 CTC 1300 SSS	19mm	1319mm	1300mm	65mm
C8030/1300/25/PSS	9458037734202	C8030/1300/25 OA 1325 CTC 1300 PSS	25mm	1325mm	1300mm	70mm
C8030/1300/25/SSS	9458037734201	C8030/1300/25 OA 1325 CTC 1300 SSS	25mm	1325mm	1300mm	70mm
C8030/1300/32/PSS	9458037735202	C8030/1300/32 OA 1332 CTC 1300 PSS	32mm	1332mm	1300mm	77mm
C8030/1300/32/SSS	9458037735201	C8030/1300/32 OA 1332 CTC 1300 SSS	32mm	1332mm	1300mm	77mm
C8030/1400/19/PSS	9458038093202	C8030/1400/19 OA 1419 CTC 1400 PSS	19mm	1419mm	1400mm	65mm
C8030/1400/19/SSS	9458038093201	C8030/1400/19 OA 1419 CTC 1400 SSS	19mm	1419mm	1400mm	65mm
C8030/1400/25/PSS	9458038094202	C8030/1400/25 OA 1425 CTC 1400 PSS	25mm	1425mm	1400mm	70mm
C8030/1400/25/SSS	9458038094201	C8030/1400/25 OA 1425 CTC 1400 SSS	25mm	1425mm	1400mm	70mm
C8030/1400/32/PSS	9458038095202	C8030/1400/32 OA 1432 CTC 1400 PSS	32mm	1432mm	1400mm	77mm
C8030/1400/32/SSS	9458038095201	C8030/1400/32 OA 1432 CTC 1400 SSS	32mm	1432mm	1400mm	77mm
C8030/1500/19/PSS	9458038393202	C8030/1500/19 OA 1519 CTC 1500 PSS	19mm	1519mm	1500mm	65mm
C8030/1500/19/SSS	9458038393201	C8030/1500/19 OA 1519 CTC 1500 SSS	19mm	1519mm	1500mm	65mm
C8030/1500/25/PSS	9458038394202	C8030/1500/25 OA 1525 CTC 1500 PSS	25mm	1525mm	1500mm	70mm
C8030/1500/25/SSS	9458038394201	C8030/1500/25 OA 1525 CTC 1500 SSS	25mm	1525mm	1500mm	70mm
C8030/1500/32/PSS	9458038395202	C8030/1500/32 OA 1532 CTC 1500 PSS	32mm	1532mm	1500mm	77mm
C8030/1500/32/SSS	9458038395201	C8030/1500/32 OA 1532 CTC 1500 SSS	32mm	1532mm	1500mm	77mm
C8030/1600/25/PSS	9458038724202	C8030/1600/25 OA 1625 CTC 1600 PSS	25mm	1625mm	1600mm	65mm
C8030/1600/25/SSS	9458038724201	C8030/1600/25 OA 1625 CTC 1600 SSS	25mm	1625mm	1600mm	65mm
C8030/1600/32/PSS	9458038725202	C8030/1600/32 OA 1632 CTC 1600 PSS	32mm	1632mm	1600mm	70mm
C8030/1600/32/SSS	9458038725201	C8030/1600/32 OA 1632 CTC 1600 SSS	32mm	1632mm	1600mm	70mm
C8030/1700/25/PSS	9458038904202	C8030/1700/25 OA 1725 CTC 1700 PSS	25mm	1725mm	1700mm	77mm
C8030/1700/25/SSS	9458038904201	C8030/1700/25 OA 1725 CTC 1700 SSS	25mm	1725mm	1700mm	77mm

Ordering details

Item	Article Number	Description	Square Tuber	Length	Fixing Centers	Projection
C8030/1700/32/PSS	9458038905202	C8030/1700/32 OA 1732 CTC 1700 PSS	32mm	1732mm	1700mm	65mm
C8030/1700/32/SSS	9458038905201	C8030/1700/32 OA 1732 CTC 1700 SSS	32mm	1732mm	1700mm	65mm
C8030/1800/25/PSS	9458039054202	C8030/1800/25 OA 1825 CTC 1800 PSS	25mm	1825mm	1800mm	70mm
C8030/1800/25/SSS	9458039054201	C8030/1800/25 OA 1825 CTC 1800 SSS	25mm	1825mm	1800mm	70mm
C8030/1800/32/PSS	9458039055202	C8030/1800/32 OA 1832 CTC 1800 PSS	32mm	1832mm	1800mm	77mm
C8030/1800/32/SSS	9458039055201	C8030/1800/32 OA 1832 CTC 1800 SSS	32mm	1832mm	1800mm	77mm
C8030/1900/25/PSS	9458039234202	C8030/1900/25 OA 1925 CTC 1900 PSS	25mm	1925mm	1900mm	65mm
C8030/1900/25/SSS	9458039234201	C8030/1900/25 OA 1925 CTC 1900 SSS	25mm	1925mm	1900mm	65mm
C8030/1900/32/PSS	9458039235202	C8030/1900/32 OA 1932 CTC 1900 PSS	32mm	1932mm	1900mm	70mm
C8030/1900/32/SSS	9458039235201	C8030/1900/32 OA 1932 CTC 1900 SSS	32mm	1932mm	1900mm	70mm
C8030/2000/25/PSS	9458039384202	C8030/2000/25 OA 2025 CTC 2000 PSS	25mm	2025mm	2000mm	77mm
C8030/2000/25/SSS	9458039384201	C8030/2000/25 OA 2025 CTC 2000 SSS	25mm	2025mm	2000mm	77mm
C8030/2000/32/PSS	9458039385202	C8030/2000/32 OA 2032 CTC 2000 PSS	32mm	2032mm	2000mm	65mm
C8030/2000/32/SSS	9458039385201	C8030/2000/32 OA 2032 CTC 2000 SSS	32mm	2032mm	2000mm	65mm
C8030/2100/32/PSS	9458039535202	C8030/2100/32 OA 2132 CTC 2100 PSS	32mm	2132mm	2100mm	70mm
C8030/2100/32/SSS	9458039535201	C8030/2100/32 OA 2132 CTC 2100 SSS	32mm	2132mm	2100mm	70mm
C8030/2200/32/PSS	9458039655202	C8030/2200/32 OA 2232 CTC 2200 PSS	32mm	2232mm	2200mm	77mm
C8030/2200/32/SSS	9458039655201	C8030/2200/32 OA 2232 CTC 2200 SSS	32mm	2232mm	2200mm	77mm
C8030/2300/32/PSS	9458039805202	C8030/2300/32 OA 2332 CTC 2300 PSS	32mm	2332mm	2300mm	65mm
C8030/2300/32/SSS	9458039805201	C8030/2300/32 OA 2332 CTC 2300 SSS	32mm	2332mm	2300mm	65mm
C8030/2400/32/PSS	9458039925202	C8030/2400/32 OA 2432 CTC 2400 PSS	32mm	2432mm	2400mm	70mm
C8030/2400/32/SSS	9458039925201	C8030/2400/32 OA 2432 CTC 2400 SSS	32mm	2432mm	2400mm	70mm
DISC FIXING						
D8030/400/19/PSS	9458033533302	D8030/400/19 OA 419 CTC 400 PSS	19mm	419mm	400mm	77mm
D8030/400/19/SSS	9458033533301	D8030/400/19 OA 419 CTC 400 SSS	19mm	419mm	400mm	77mm
D8030/400/25/PSS	9458033534302	D8030/400/25 OA 425 CTC 400 PSS	25mm	425mm	400mm	65mm
D8030/400/25/SSS	9458033534301	D8030/400/25 OA 425 CTC 400 SSS	25mm	425mm	400mm	65mm
D8030/400/32/PSS	9458033535302	D8030/400/32 OA 432 CTC 400 PSS	32mm	432mm	400mm	70mm
D8030/400/32/SSS	9458033535301	D8030/400/32 OA 432 CTC 400 SSS	32mm	432mm	400mm	70mm
D8030/500/19/PSS	9458034253302	D8030/500/19 OA 519 CTC 500 PSS	19mm	519mm	500mm	77mm
D8030/500/19/SSS	9458034253301	D8030/500/19 OA 519 CTC 500 SSS	19mm	519mm	500mm	77mm
D8030/500/25/PSS	9458034254302	D8030/500/25 OA 525 CTC 500 PSS	25mm	525mm	500mm	65mm
D8030/500/25/SSS	9458034254301	D8030/500/25 OA 525 CTC 500 SSS	25mm	525mm	500mm	65mm
D8030/500/32/PSS	9458034255302	D8030/500/32 OA 532 CTC 500 PSS	32mm	532mm	500mm	70mm
D8030/500/32/SSS	9458034255301	D8030/500/32 OA 532 CTC 500 SSS	32mm	532mm	500mm	70mm
D8030/600/19/PSS	9458034733302	D8030/600/19 OA 619 CTC 600 PSS	19mm	619mm	600mm	77mm
D8030/600/19/SSS	9458034733301	D8030/600/19 OA 619 CTC 600 SSS	19mm	619mm	600mm	77mm
D8030/600/25/PSS	9458034734302	D8030/600/25 OA 625 CTC 600 PSS	25mm	625mm	600mm	65mm
D8030/600/25/SSS	9458034734301	D8030/600/25 OA 625 CTC 600 SSS	25mm	625mm	600mm	65mm

Ordering details

Item	Article Number	Description	Square Tuber	Length	Fixing Centers	Projection
D8030/600/32/PSS	9458034735302	D8030/600/32 OA 632 CTC 600 PSS	32mm	632mm	600mm	70mm
D8030/600/32/SSS	9458034735301	D8030/600/32 OA 632 CTC 600 SSS	32mm	632mm	600mm	70mm
D8030/700/19/PSS	9458035243302	D8030/700/19 OA 719 CTC 700 PSS	19mm	719mm	700mm	77mm
D8030/700/19/SSS	9458035243301	D8030/700/19 OA 719 CTC 700 SSS	19mm	719mm	700mm	77mm
D8030/700/25/PSS	9458035244302	D8030/700/25 OA 725 CTC 700 PSS	25mm	725mm	700mm	65mm
D8030/700/25/SSS	9458035244301	D8030/700/25 OA 725 CTC 700 SSS	25mm	725mm	700mm	65mm
D8030/700/32/PSS	9458035245302	D8030/700/32 OA 732 CTC 700 PSS	32mm	732mm	700mm	70mm
D8030/700/32/SSS	9458035245301	D8030/700/32 OA 732 CTC 700 SSS	32mm	732mm	700mm	70mm
D8030/800/19/PSS	9458035813302	D8030/800/19 OA 819 CTC 800 PSS	19mm	819mm	800mm	77mm
D8030/800/19/SSS	9458035813301	D8030/800/19 OA 819 CTC 800 SSS	19mm	819mm	800mm	77mm
D8030/800/25/PSS	9458035814302	D8030/800/25 OA 825 CTC 800 PSS	25mm	825mm	800mm	65mm
D8030/800/25/SSS	9458035814301	D8030/800/25 OA 825 CTC 800 SSS	25mm	825mm	800mm	65mm
D8030/800/32/PSS	9458035815302	D8030/800/32 OA 832 CTC 800 PSS	32mm	832mm	800mm	70mm
D8030/800/32/SSS	9458035815301	D8030/800/32 OA 832 CTC 800 SSS	32mm	832mm	800mm	70mm
D8030/900/19/PSS	9458036233302	D8030/900/19 OA 919 CTC 900 PSS	19mm	919mm	900mm	77mm
D8030/900/19/SSS	9458036233301	D8030/900/19 OA 919 CTC 900 SSS	19mm	919mm	900mm	77mm
D8030/900/25/PSS	9458036234302	D8030/900/25 OA 925 CTC 900 PSS	25mm	925mm	900mm	65mm
D8030/900/25/SSS	9458036234301	D8030/900/25 OA 925 CTC 900 SSS	25mm	925mm	900mm	65mm
D8030/900/32/PSS	9458036235302	D8030/900/32 OA 932 CTC 900 PSS	32mm	932mm	900mm	70mm
D8030/900/32/SSS	9458036235301	D8030/900/32 OA 932 CTC 900 SSS	32mm	932mm	900mm	70mm
D8030/1000/19/PSS	9458036653302	D8030/1000/19 OA 1019 CTC 1000 PSS	19mm	1019mm	1000mm	65mm
D8030/1000/19/SSS	9458036653301	D8030/1000/19 OA 1019 CTC 1000 SSS	19mm	1019mm	1000mm	65mm
D8030/1000/25/PSS	9458036654302	D8030/1000/25 OA 1025 CTC 1000 PSS	25mm	1025mm	1000mm	70mm
D8030/1000/25/SSS	9458036654301	D8030/1000/25 OA 1025 CTC 1000 SSS	25mm	1025mm	1000mm	70mm
D8030/1000/32/PSS	9458036655302	D8030/1000/32 OA 1032 CTC 1000 PSS	32mm	1032mm	1000mm	77mm
D8030/1000/32/SSS	9458036655301	D8030/1000/32 OA 1032 CTC 1000 SSS	32mm	1032mm	1000mm	77mm
D8030/1100/19/PSS	9458037013302	D8030/1100/19 OA 1119 CTC 1100 PSS	19mm	1119mm	1100mm	65mm
D8030/1100/19/SSS	9458037013301	D8030/1100/19 OA 1119 CTC 1100 SSS	19mm	1119mm	1100mm	65mm
D8030/1100/25/PSS	9458037014302	D8030/1100/25 OA 1125 CTC 1100 PSS	25mm	1125mm	1100mm	70mm
D8030/1100/25/SSS	9458037014301	D8030/1100/25 OA 1125 CTC 1100 SSS	25mm	1125mm	1100mm	70mm
D8030/1100/32/PSS	9458037015302	D8030/1100/32 OA 1132 CTC 1100 PSS	32mm	1132mm	1100mm	77mm
D8030/1100/32/SSS	9458037015301	D8030/1100/32 OA 1132 CTC 1100 SSS	32mm	1132mm	1100mm	77mm
D8030/1200/19/PSS	9458037403302	D8030/1200/19 OA 1219 CTC 1200 PSS	19mm	1219mm	1200mm	65mm
D8030/1200/19/SSS	9458037403301	D8030/1200/19 OA 1219 CTC 1200 SSS	19mm	1219mm	1200mm	65mm
D8030/1200/25/PSS	9458037404302	D8030/1200/25 OA 1225 CTC 1200 PSS	25mm	1225mm	1200mm	70mm
D8030/1200/25/SSS	9458037404301	D8030/1200/25 OA 1225 CTC 1200 SSS	25mm	1225mm	1200mm	70mm
D8030/1200/32/PSS	9458037405302	D8030/1200/32 OA 1232 CTC 1200 PSS	32mm	1232mm	1200mm	77mm
D8030/1200/32/SSS	9458037405301	D8030/1200/32 OA 1232 CTC 1200 SSS	32mm	1232mm	1200mm	77mm
D8030/1300/19/PSS	9458037733302	D8030/1300/19 OA 1319 CTC 1300 PSS	19mm	1319mm	1300mm	65mm
D8030/1300/19/SSS	9458037733301	D8030/1300/19 OA 1319 CTC 1300 SSS	19mm	1319mm	1300mm	65mm

Ordering details

Item	Article Number	Description	Square Tuber	Length	Fixing Centers	Projection
D8030/1300/25/PSS	9458037734302	D8030/1300/25 OA 1325 CTC 1300 PSS	25mm	1325mm	1300mm	70mm
D8030/1300/25/SSS	9458037734301	D8030/1300/25 OA 1325 CTC 1300 SSS	25mm	1325mm	1300mm	70mm
D8030/1300/32/PSS	9458037735302	D8030/1300/32 OA 1332 CTC 1300 PSS	32mm	1332mm	1300mm	77mm
D8030/1300/32/SSS	9458037735301	D8030/1300/32 OA 1332 CTC 1300 SSS	32mm	1332mm	1300mm	77mm
D8030/1400/19/PSS	9458038093302	D8030/1400/19 OA 1419 CTC 1400 PSS	19mm	1419mm	1400mm	65mm
D8030/1400/19/SSS	9458038093301	D8030/1400/19 OA 1419 CTC 1400 SSS	19mm	1419mm	1400mm	65mm
D8030/1400/25/PSS	9458038094302	D8030/1400/25 OA 1425 CTC 1400 PSS	25mm	1425mm	1400mm	70mm
D8030/1400/25/SSS	9458038094301	D8030/1400/25 OA 1425 CTC 1400 SSS	25mm	1425mm	1400mm	70mm
D8030/1400/32/PSS	9458038095302	D8030/1400/32 OA 1432 CTC 1400 PSS	32mm	1432mm	1400mm	77mm
D8030/1400/32/SSS	9458038095301	D8030/1400/32 OA 1432 CTC 1400 SSS	32mm	1432mm	1400mm	77mm
D8030/1500/19/PSS	9458038393302	D8030/1500/19 OA 1519 CTC 1500 PSS	19mm	1519mm	1500mm	65mm
D8030/1500/19/SSS	9458038393301	D8030/1500/19 OA 1519 CTC 1500 SSS	19mm	1519mm	1500mm	65mm
D8030/1500/25/PSS	9458038394302	D8030/1500/25 OA 1525 CTC 1500 PSS	25mm	1525mm	1500mm	70mm
D8030/1500/25/SSS	9458038394301	D8030/1500/25 OA 1525 CTC 1500 SSS	25mm	1525mm	1500mm	70mm
D8030/1500/32/PSS	9458038395302	D8030/1500/32 OA 1532 CTC 1500 PSS	32mm	1532mm	1500mm	77mm
D8030/1500/32/SSS	9458038395301	D8030/1500/32 OA 1532 CTC 1500 SSS	32mm	1532mm	1500mm	77mm
D8030/1600/25/PSS	9458038724302	D8030/1600/25 OA 1625 CTC 1600 PSS	25mm	1625mm	1600mm	65mm
D8030/1600/25/SSS	9458038724301	D8030/1600/25 OA 1625 CTC 1600 SSS	25mm	1625mm	1600mm	65mm
D8030/1600/32/PSS	9458038725302	D8030/1600/32 OA 1632 CTC 1600 PSS	32mm	1632mm	1600mm	70mm
D8030/1600/32/SSS	9458038725301	D8030/1600/32 OA 1632 CTC 1600 SSS	32mm	1632mm	1600mm	70mm
D8030/1700/25/PSS	9458038904302	D8030/1700/25 OA 1725 CTC 1700 PSS	25mm	1725mm	1700mm	77mm
D8030/1700/25/SSS	9458038904301	D8030/1700/25 OA 1725 CTC 1700 SSS	25mm	1725mm	1700mm	77mm
D8030/1700/32/PSS	9458038905302	D8030/1700/32 OA 1732 CTC 1700 PSS	32mm	1732mm	1700mm	65mm
D8030/1700/32/SSS	9458038905301	D8030/1700/32 OA 1732 CTC 1700 SSS	32mm	1732mm	1700mm	65mm
D8030/1800/25/PSS	9458039054302	D8030/1800/25 OA 1825 CTC 1800 PSS	25mm	1825mm	1800mm	70mm
D8030/1800/25/SSS	9458039054301	D8030/1800/25 OA 1825 CTC 1800 SSS	25mm	1825mm	1800mm	70mm
D8030/1800/32/PSS	9458039055302	D8030/1800/32 OA 1832 CTC 1800 PSS	32mm	1832mm	1800mm	77mm
D8030/1800/32/SSS	9458039055301	D8030/1800/32 OA 1832 CTC 1800 SSS	32mm	1832mm	1800mm	77mm
D8030/1900/25/PSS	9458039234302	D8030/1900/25 OA 1925 CTC 1900 PSS	25mm	1925mm	1900mm	65mm
D8030/1900/25/SSS	9458039234301	D8030/1900/25 OA 1925 CTC 1900 SSS	25mm	1925mm	1900mm	65mm
D8030/1900/32/PSS	9458039235302	D8030/1900/32 OA 1932 CTC 1900 PSS	32mm	1932mm	1900mm	70mm
D8030/1900/32/SSS	9458039235301	D8030/1900/32 OA 1932 CTC 1900 SSS	32mm	1932mm	1900mm	70mm
D8030/2000/25/PSS	9458039384302	D8030/2000/25 OA 2025 CTC 2000 PSS	25mm	2025mm	2000mm	77mm
D8030/2000/25/SSS	9458039384301	D8030/2000/25 OA 2025 CTC 2000 SSS	25mm	2025mm	2000mm	77mm
D8030/2000/32/PSS	9458039385302	D8030/2000/32 OA 2032 CTC 2000 PSS	32mm	2032mm	2000mm	65mm
D8030/2000/32/SSS	9458039385301	D8030/2000/32 OA 2032 CTC 2000 SSS	32mm	2032mm	2000mm	65mm
D8030/2100/32/PSS	9458039535302	D8030/2100/32 OA 2132 CTC 2100 PSS	32mm	2132mm	2100mm	70mm
D8030/2100/32/SSS	9458039535301	D8030/2100/32 OA 2132 CTC 2100 SSS	32mm	2132mm	2100mm	70mm
D8030/2200/32/PSS	9458039655302	D8030/2200/32 OA 2232 CTC 2200 PSS	32mm	2232mm	2200mm	77mm
D8030/2200/32/SSS	9458039655301	D8030/2200/32 OA 2232 CTC 2200 SSS	32mm	2232mm	2200mm	77mm

Ordering details

Item	Article Number	Description	Square Tuber	Length	Fixing Centers	Projection
D8030/2300/32/PSS	9458039805302	D8030/2300/32 OA 2332 CTC 2300 PSS	32mm	2332mm	2300mm	65mm
D8030/2300/32/SSS	9458039805301	D8030/2300/32 OA 2332 CTC 2300 SSS	32mm	2332mm	2300mm	65mm
D8030/2400/32/PSS	9458039925302	D8030/2400/32 OA 2432 CTC 2400 PSS	32mm	2432mm	2400mm	70mm
D8030/2400/32/SSS	9458039925301	D8030/2400/32 OA 2432 CTC 2400 SSS	32mm	2432mm	2400mm	70mm
ACCESSORIES - DISC FIXINGS - sold as a pair						
DF19/M8/75 PSS	9459751988102	19MM DISK FIX PAIR M8X75MM PSS				
DF19/M8/75 SSS	9459751988101	19MM DISK FIX PAIR M8X75MM SSS				
DF25/M8/75 PSS	9459752588102	25MM DISK FIX PAIR M8X75MM PSS				
DF25/M8/75 SSS	9400000014108	25MM DISK FIX PAIR M8X75MM SSS				
DF32/M8/75 PSS	9459753288102	32MM DISK FIX PAIR M8X75MM PSS				
DF32/M8/75 SSS	9400000014109	32MM DISK FIX PAIR M8X75MM SSS				
ACCESSORIES - GLASS FIXINGS - sold as a pair						
GDF/19/M8/50 PSS	9459501988102	19MM GLASS DISK FIX PAIR PSS M8X50MM				
GDF/19/M8/50 SSS	9459501988101	19MM GLASS DISK FIX PAIR SSS M8X50MM				
GDF25/M8/50 PSS	9459502588102	25MM GLASS DISK FIX PSS PAIR M8X50MM				
GDF25/M8/50 SSS	9459502588101	25MM GLASS DISK FIX SSS PAIR M8X50MM				
GDF32/M8/50 PSS	9459503288102	32MM GLASS DISK FIX PSS PAIR M8X50MM				
GDF32/M8/50 SSS	9459503288101	32MM GLASS DISK FIX SSS PAIR M8X50MM				